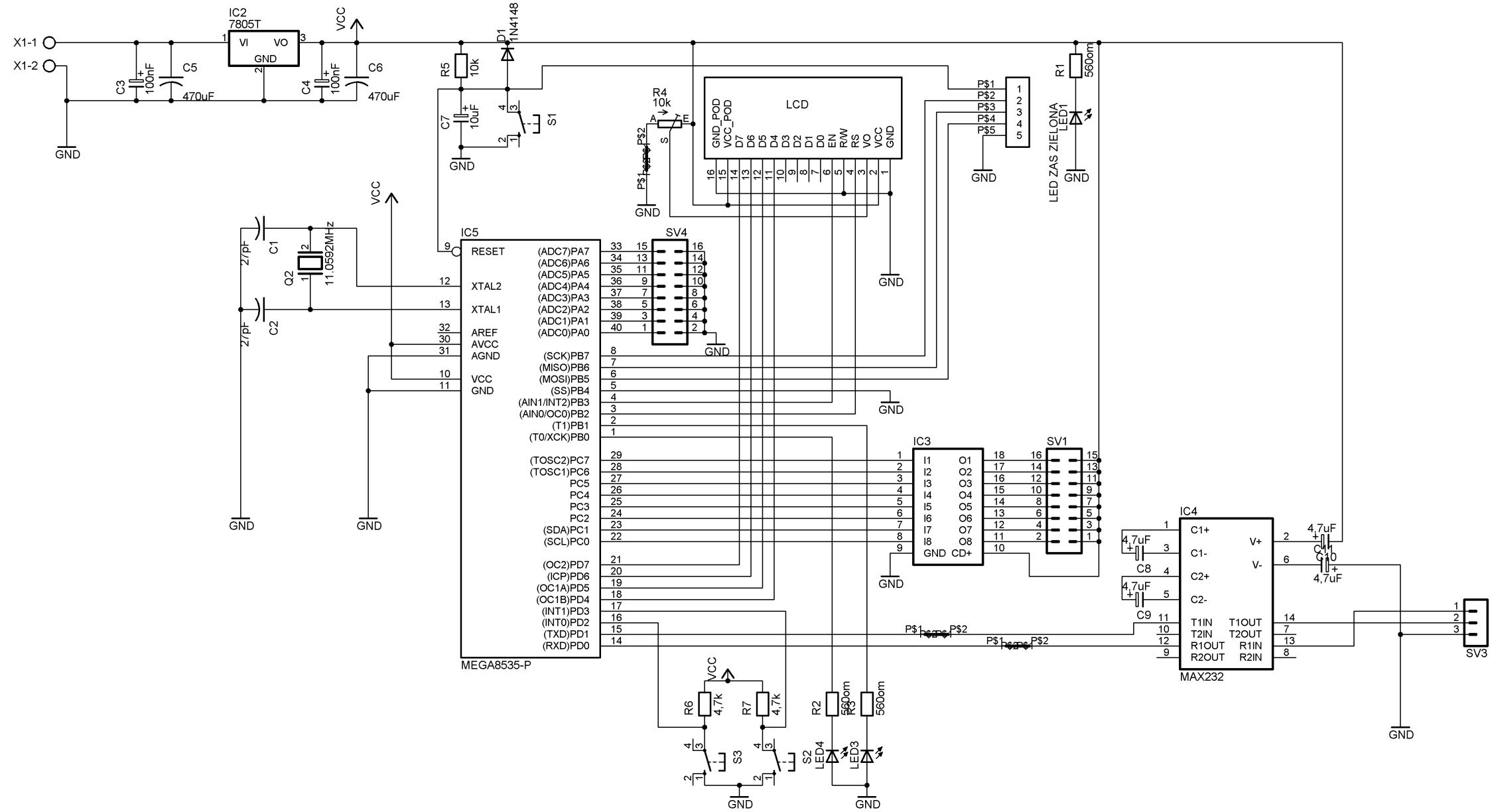
X1-1
X1-2
GND
C3
100nF
C5
470uF
IC2
7805T
VI
VO
GND
VCC
C4
100nF
C6
470uF
R5
10k
D1
1N4148
C7
10uF
S1
R4
10k
P$2
P$1
LCD
GND_POD
VCC_POD
D7
D6
D5
D4
D3
D2
D1
D0
EN
R/W
RS
VO
VCC
GND
P$1
P$2
P$3
P$4
P$5
R1
560om
LED1
LED ZAS ZIELONA
C1
27pF
Q2
11.0592MHz
C2
27pF
IC5
RESET
XTAL2
XTAL1
AREF
AVCC
AGND
VCC
GND
(ADC7)PA7
(ADC6)PA6
(ADC5)PA5
(ADC4)PA4
(ADC3)PA3
(ADC2)PA2
(ADC1)PA1
(ADC0)PA0
(SCK)PB7
(MISO)PB6
(MOSI)PB5
(SS)PB4
(AIN1/INT2)PB3
(AIN0/OC0)PB2
(T1)PB1
(T0/XCK)PB0
(TOSC2)PC7
(TOSC1)PC6
PC5
PC4
PC3
PC2
(SDA)PC1
(SCL)PC0
(OC2)PD7
(ICP)PD6
(OC1A)PD5
(OC1B)PD4
(INT1)PD3
(INT0)PD2
(TXD)PD1
(RXD)PD0
MEGA8535-P
SV4
IC3
I1
I2
I3
I4
I5
I6
I7
I8
GND
CD+
O1
O2
O3
O4
O5
O6
O7
O8
SV1
IC4
C1+
C1-
C2+
C2-
V+
V-
T1IN
T2IN
R1OUT
R2OUT
T1OUT
T2OUT
R1IN
R2IN
MAX232
4,7uF
C8
C9
C10
SV3
R6
4,7k
R7
4,7k
S3
S2
R2
560om
R3
560om
LED4
LED3